X|RAIN

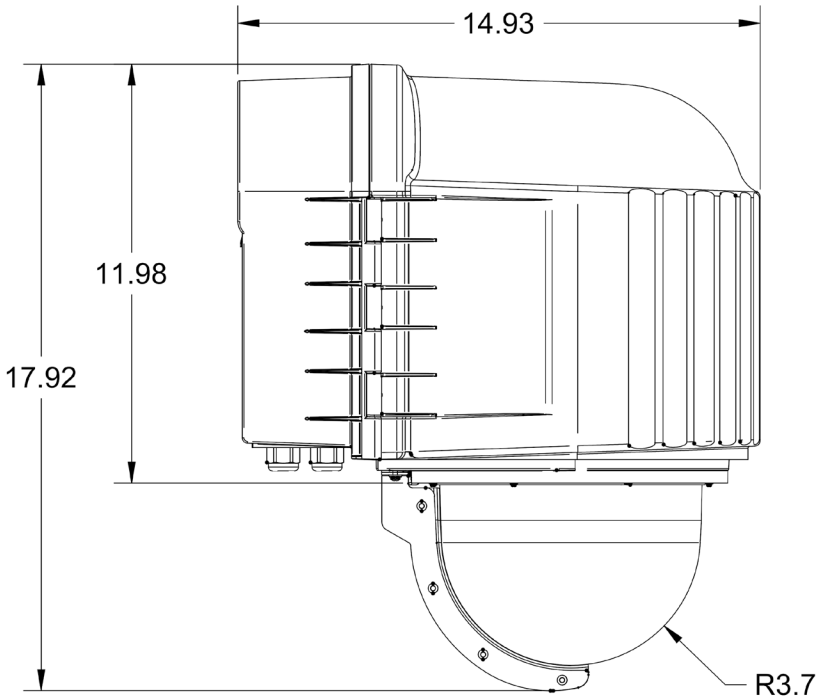

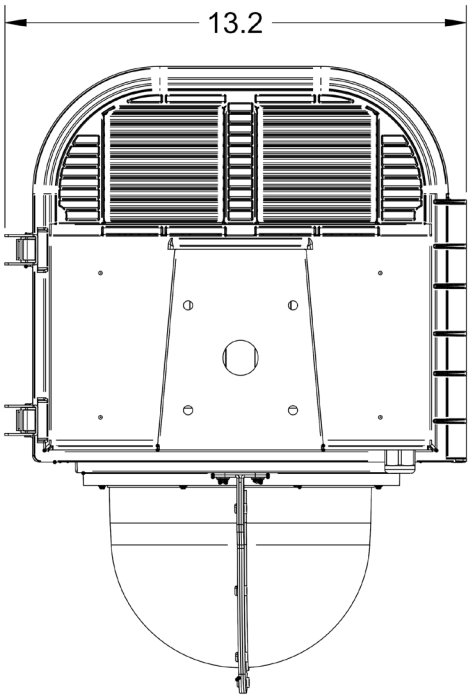

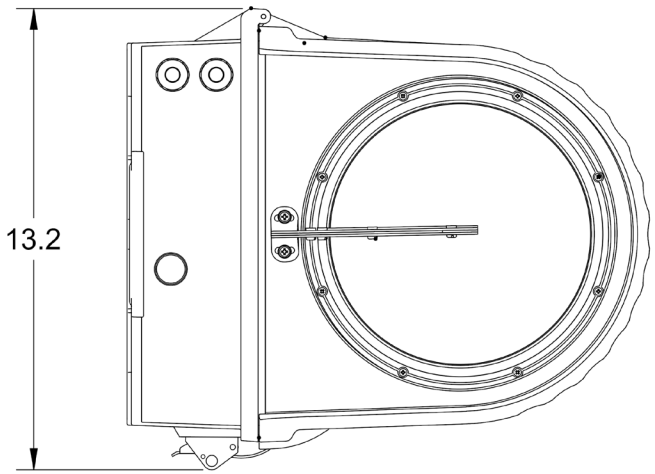

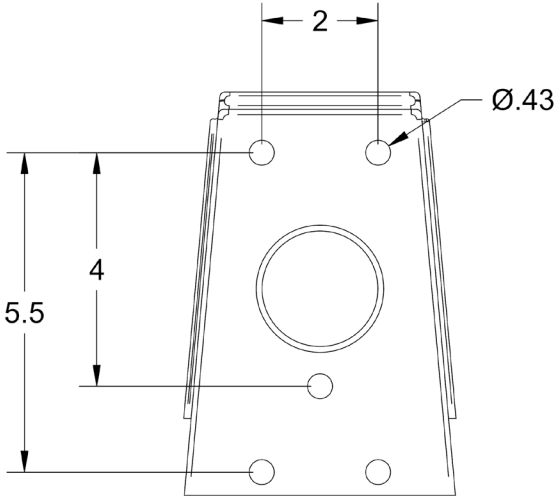

W: www.xstreamdesigns.com
E: info@xstreamdesigns.com
T: 858.768.2992
2120 Jimmy Durante Blvd. #115
Del Mar, CA 92014 USA

©2021 X Stream Designs, Inc.